AIR DISTRIBUTION

1- Intake & Relief Louvers to be Louvers & Dampers, Inc. Model EL-102 or app'd equal - with ½" mesh galvanized removable screen.
2- Exhaust Register - Barber-Colman Co. Model EFRF-GVOL - Circular mesh face - Nº17 Finish.
3- Exhaust Grille - Barber-Colman Co. Model EFRF - Circular Mesh Face & Nº17 Fin.
4- Supply Register - Barber-Colman Co. Model EA-GVOL with Nº14 Finish.
5- Return Air Grille - Barber-Colman Co. Model FFRF with Nº 14 Finish.
6- Return Air Register - (First Floor) Barber-Colman Co. Model 5TB-GVOL - Extruded aluminum - anodized.
7- Return Air Register - Barber-Colman Co. Model EFRF-GVOL with Nº14 Finish

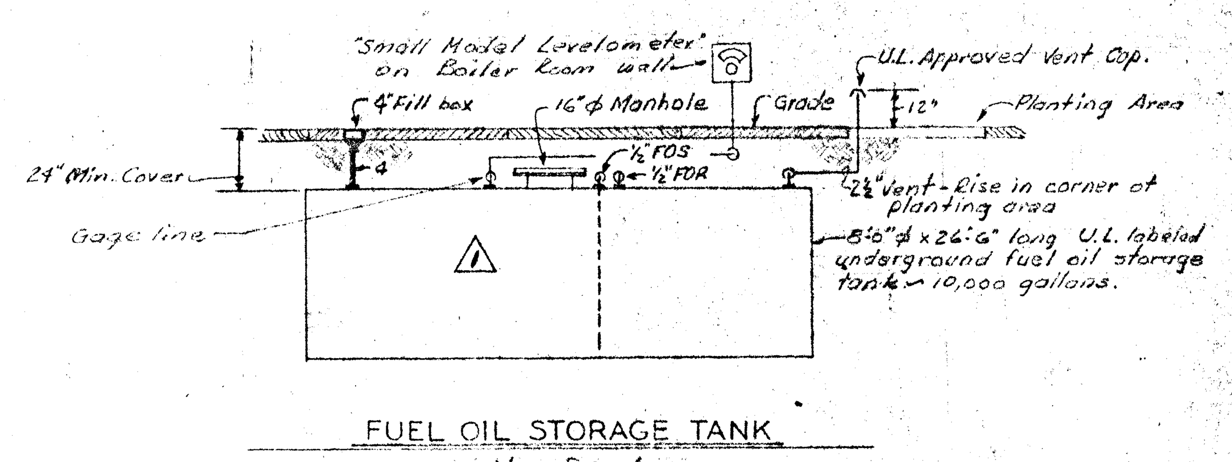

FUEL OIL STORAGE TANK
No Scale

GENERAL NOTES

1- All items of equipment shall be located on 6" thick concrete bases, unless otherwise noted.
2- Bases for pumps shall extend four (4) inches beyond pumps & motor bases in all directions. Pumps shall be securely grouted & bolted. Pump bases shall be located a minimum distance of one pump-base width apart.
3- All piping shall be supported in accordance with specifications & further supports or hangers shall be adjacent to elbows to prevent weight of piping being placed on equipment.
4- All wall mounted thermostats shall be located 5'0" above finished floor.
5- All valves & specialties shall be line size - unless noted otherwise - using concentric reducers on pump suctions & eccentric on pump discharges where required, & eccentric reducers for automatic valves.
6- Extend all drain lines to nearest floor drain - or as indicated - so routed as to avoid interference with passageways & maintenance.
7- All piping shall pitch down in direction of flow a minimum of one inch (1") per thirty (30) feet & ½" drain valves provided at all low points & manual air vents at all high points.
8- All pipes - ducts - etc. extending thru outside walls or roofs shall be flashed & counter-flashed in a water-tight manner.
9- All pipe & duct insulation shall be run continuously thru walls & floors.
10- All piping & ductwork shall be coordinated with other phases of the work, to avoid interference.
11- For location & quantity of louvers specified with fan coil units, see Architectural Drawings - Sheets 5 & 6 "elevations" & labelled "air intake vents".
12- Instrument test holes shall be installed in air handling unit return air plenums & adjacent to air handling units in discharge.
13- Fire dampers shall be installed in all ducts where ducts pass thru floors.
14- Increase all duct sizes - where lined - to allow for thickness of liner.
15- Install interlock control wiring from cooling tower, condenser water pump, & Primary Chilled water pump to terminal provided on chiller panel - all in accordance with manufacturers instructions.

FINNED TUBE RADIATION

Symbol	MBH	Tube	Fin	Element	Cover	Runout	Remarks
FT-1	22.33	1¼"	4"	2-Row	20"	¾"	Wall to wall (or column) cover
FT-2	18.65	1¼"	4"	2-Row	20"	¾"	
FT-3	3.00	1¼"	4"	1-Row	12½"	½"	
FT-4	12.88	1¼"	4"		Custom	¾"	(Type W)
FT-5	7.36	1¼"	4"		Custom	¾"	(Type W)

LEGEND

Symbol	Description	Symbol	Description
———	HW Hot Water Supply (Heating)	—⋈—	Gate valve
— — —	HWR Hot Water Return (Heating)	—N—	Swing check valve
—S—	Hot water - Chilled water Supply		Balancing fitting
—R—	Hot water - Chilled water Return		Strainer
—CH—	Chilled water Supply	—‖—	Union
—CHR—	Chilled water Return	→	Direction of flow
—C—	Condenser water Supply	(T)	Thermostat
—CR—	Condenser water Return	(FC-1)	Fan Coil Unit Nº1
—·—	Cold water	(FT-1)	Finned Tube Radiation Nº1
CO	Plugged tee for cleaning		Gage cock
	4½" Dial Pressure Gage w/ cock		Thermometer
	Three-way Valve	AHU	Air Handling Unit Nº
	Combination Troffer & 5"ϕ Duct supply (all) 90 cfm - SUPPLY		Combination Troffer used for RETURN (100 cfm max.)

DESIGN CONDITIONS

	OUTSIDE	INSIDE
SUMMER	95°F D.B. & 77°F W.B.	78°F D.B. - 65°F W.B. - 50% R.H.
WINTER	15°F D.B.	72°F D.B.

AIR HANDLING UNITS

DESIG.	AIR HANDLING UNIT NO.	1	2	3
FAN	CFM	10,660	2,500	11,600
	TOTAL STATIC PRESSURE - IN.W.G.	2.00	1.50	1.75
	EXTERNAL STATIC PRESS. - IN.W.G.	0.80	0.30	0.50
	MAX. OUTLET VELOCITY - FPM	1600	1360	1800
	MOTOR HORSEPOWER (MIN.)	7½	1	5
CHILLED WATER & HOT WATER COIL (TYPE "W") — COOLING	CFM	10,660	2,500	11,600
	CAPACITY - BTUH	349,869	81,646	304,981
	ENTERING AIR TEMP. - °F D.B.	81.8	83.0	80.1
	ENTERING AIR TEMP. - °F W.B.	68.6	69.6	67.1
	LEAVING AIR TEMP. - °F D.B.	61.6	62.1	62.2
	LEAVING AIR TEMP. - °F W.B.	58.2	59.2	58.3
	ENT. CHILLED WATER TEMP. - °F	45.0	45.0	45.0
	GPM CHILLED WATER AVAILABLE	88	21	76
	MAX. WATER PRESS. DROP - PSI	8	2	6
	MAX. FACE VELOCITY - FPM	530	450	575
HEATING	CFM	10,660	2,500	11,600
	CAPACITY - BTUH	241,500	128,050	261,340
	ENTERING AIR TEMP. - °F D.B.	60.0	55.5	64.2
	LEAVING AIR TEMP. - °F D.B.	81.0	101.9	85.1
	ENTERING HOT WATER TEMP. - °F	190	190	190
	GPM HOT WATER AVAILABLE	88	21	76
	MAX. WATER PRESS. DROP - PSI	8	2	6
DAMPERS	MAXIMUM OUTSIDE AIR - CFM	10,660	720	11,600
	MAXIMUM RETURN AIR - CFM	8,260	1780	10,100
	MINIMUM OUTSIDE AIR - CFM	2,400	720	1,500
	MAX. FACE VELOCITY - FPM	1500	1500	1500

FAN COIL UNITS

Unit Symbol	CFM ** Total	Cooling Total Heat	Cooling Sensible Heat	GPM Cooling	P.D. Cooling Ft. H₂O	Heating MBH	GPM Heating	P.D. Heating Ft. H₂O	Manufacturers * Model Nº
FC-1	600	11,941	9,584	1.9	2.4	13.2	1.25	1.0	Trane DD-62
FC-2	400	7,241	4,884	1.4	2.3	8.0	0.75	0.3	DD-42
FC-3	400	10,850	7,320	2.2	2.5	8.0	0.75	0.3	DD-42
FC-4	600	12,492	10,135	2.5	3.8	13.2	1.25	1.0	DD-62
FC-5	600	13,000	10,050	2.6	3.9	13.2	1.25	1.0	DD-62
FC-6	400	10,837	8,030	2.2	2.5	8.0	0.75	0.3	DD-42
FC-7	600	11,100	8,743	2.3	3.0	7.9	0.30	0.3	DD-62
FC-8	600	13,526	11,169	2.7	4.5	13.2	1.25	1.0	DD-62
FC-9	600	16,650	13,100	3.4	6.5	11.5	0.75	0.5	DD-62
FC-10	600	17,900	13,795	3.6	7.1	11.5	0.75	0.5	DD-62
FC-11	600	14,541	9,824	2.9	5.0	12.1	1.00	0.6	DD-62
FC-12	400	9,341	7,073	1.9	2.0	8.0	0.75	0.3	DD-42
FC-13	600	15,033	11,056	3.1	5.2	12.2	1.00	0.6	DD-62

* All FCU Cabinets to be size DD-62.
** All units - 1550 RPM & 45 cfm Outside Air.

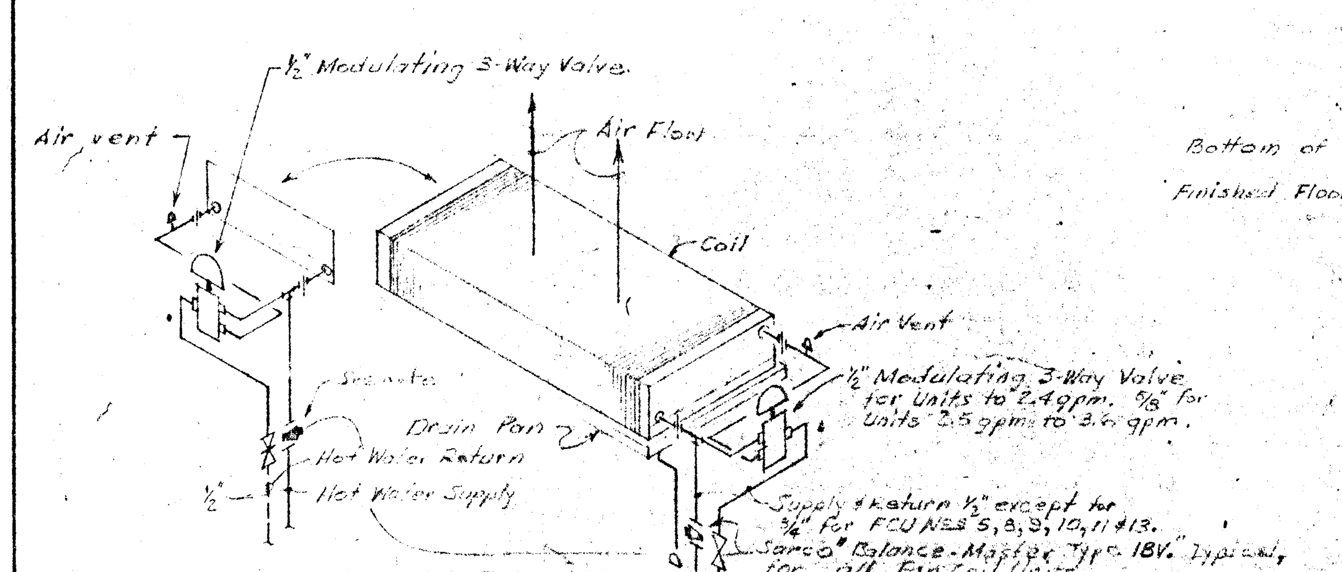

FAN-COIL UNIT PIPING
No Scale

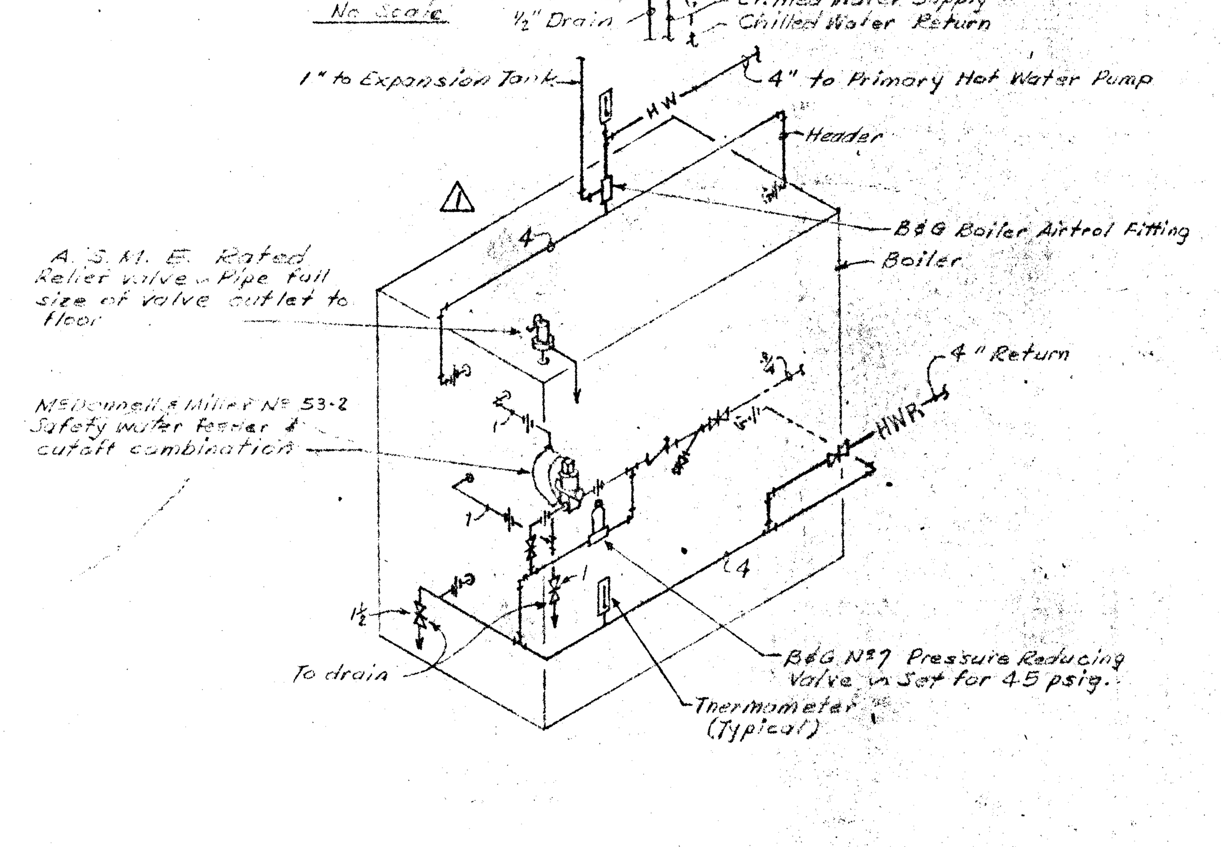

BOILER PIPING
No Scale

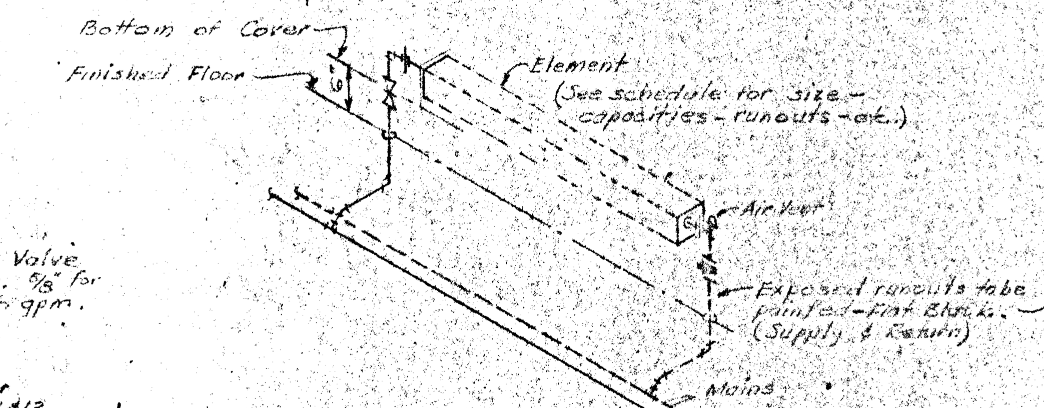

TYPICAL
FINNED-TUBE RADIATION
No Scale

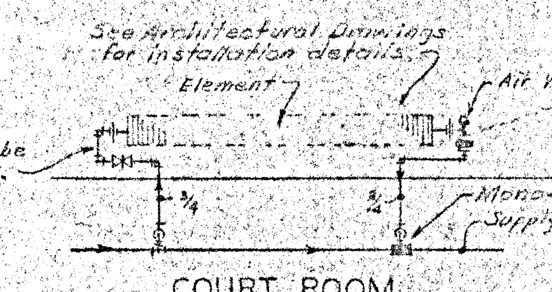

COURT ROOM
FINNED TUBE RADIATION
No Scale

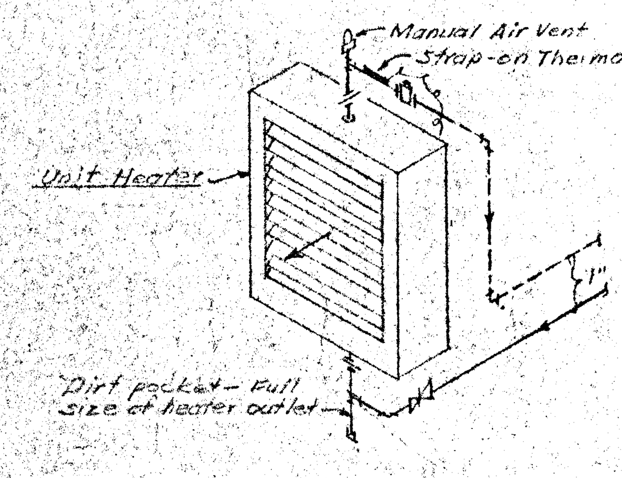

UNIT HEATER PIPING
No Scale

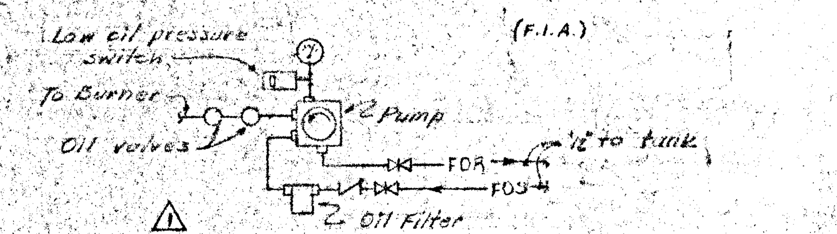

OIL PIPING AT THE BURNER
No Scale

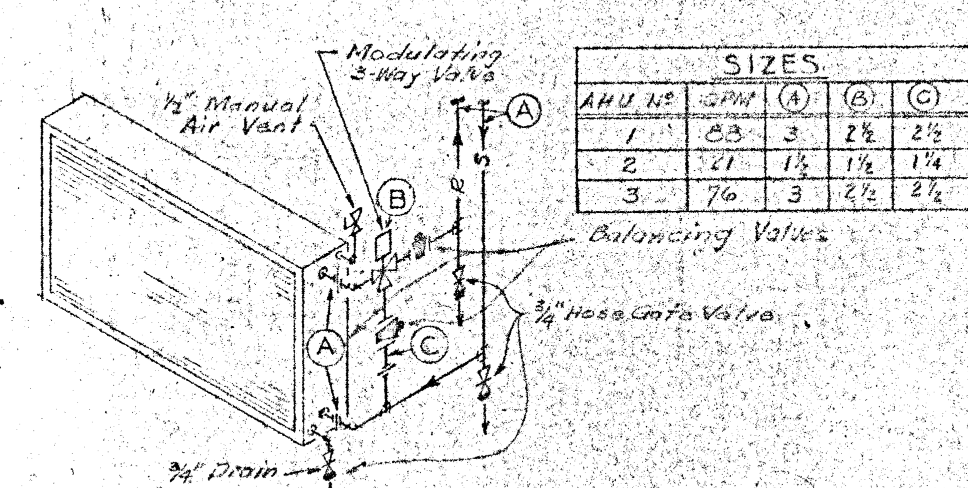

SIZES				
AHU Nº	GPM	(A)	(B)	(C)
1	83	3	2½	2½
2	21	1½	1½	1¼
3	76	3	2½	2½

A.H.U. COIL PIPING
No Scale

AS-BUILT DRAWING
I hereby certify that all changes from the original drawings, if any, are accurately indicated hereon, and that the installation has been made accordingly.
9/10/65 (Date)
W.O. Blackstone Co., Inc. (Contractor)
By [signature]

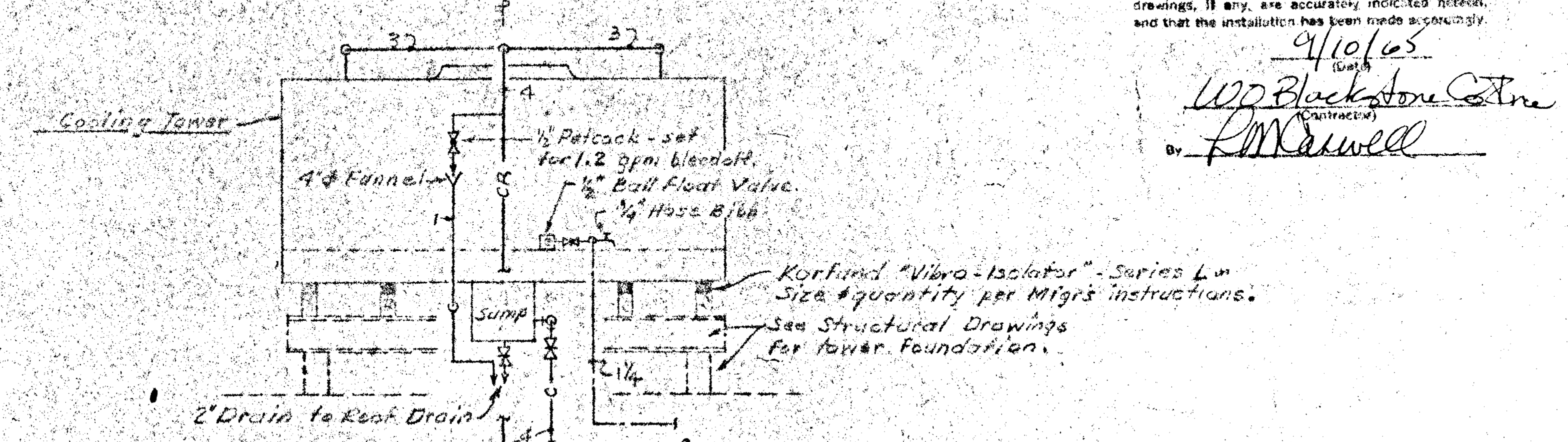

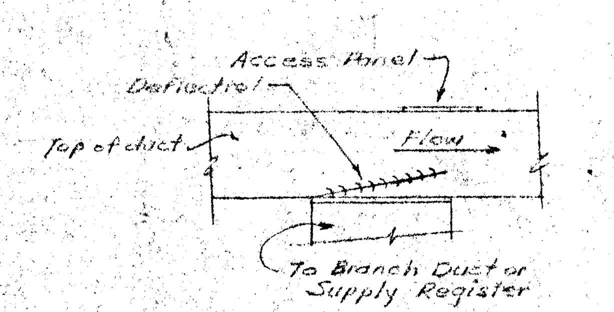

DUCTWORK DETAIL
No Scale

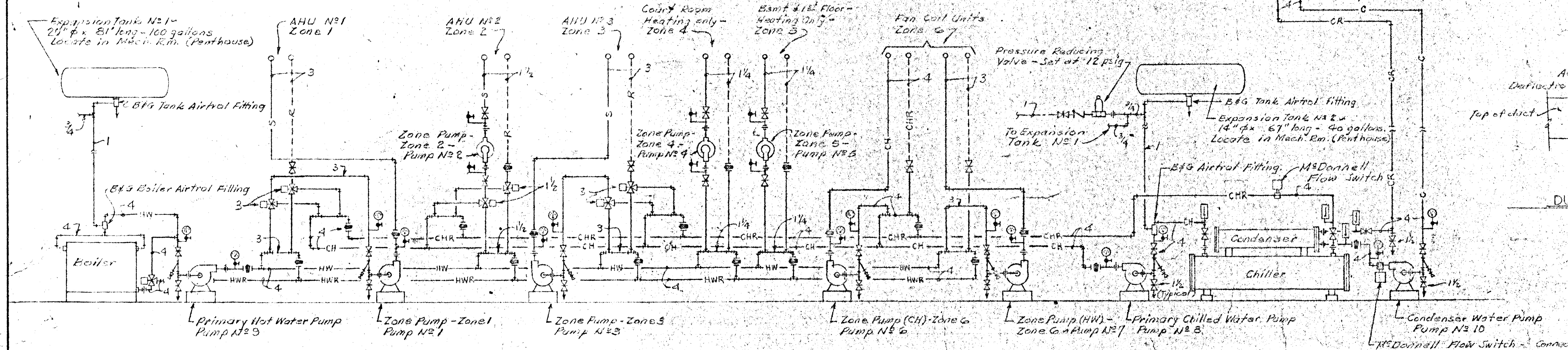

EQUIPMENT ROOM PIPING
No Scale

PUMPS

Nº	Service	GPM	Head-Ft	RPM	HP	B&G Model	Type	Remarks
1	Zone 1	30	40	1750	1½	1531-2AB	C.C. Centrif.	Base Mounted
2	Zone 2	21	35		¾	60-4	In line	—
3	Zone 3	76	35		1	1531-2AB	C.C. Centrif.	Base Mounted
4	Zone 4	14	15		⅓	HD-3	In line	—
5	Zone 5	12	8		⅙	2"	In line	—
6	Zone 6 (C.W.)	200	65		7½	1531-2BB	C.C. Centrif.	Base Mounted
7	Zone 6 (H.W.)	95	65		3	1531-2AB		
8	Primary CW (2)	284	15		3	1531-3A		
9	Primary H.W.	150	15		1½	1531-2½A		
10	Condenser Water (2)	366	45		7½	1531-4BB		

C.W. = Chilled Water Service
H.W. = Hot Water Service

CHILLER

Tons of Refrigeration	T	119.2
Entering Chilled Water Temperature	°F	54.0
Leaving Chilled Water Temperature	°F	44.0
GPM Chilled Water	GPM	284
Maximum Chiller Pressure Drop	Feet water	11.5
GPM Condenser Water Available	GPM	366
Maximum Condenser Pressure Drop	Feet water	10.0
Scale Factor - Chiller & Condenser		0.0005
Entering Condenser Water Temperature	°F	85
Compressor	KW	101.5

COOLING TOWER

Entering Water Temperature	°F	95
Leaving Water Temperature	°F	85
Entering Air - Wet Bulb Temperature	°F	77
GPM	GPM	366
Capacity - Tons	T	120
Motor HP - Fan	HP	7½
Pumping Head	Feet water	(14)

BOILER

Fuel	Type	Gross Output	Net Rating	Temp	Draft Fan	Manufacturer & Model
Nº2 Oil	Hot water	2064 MBH	1602.5 MBH	170-190°F	———	H.B. Smith Nº 3500 - 9 Sections

EXHAUST FANS

Nº	Cfm	S.P.	HP	RPM	Mfgr. & Model	Remarks
1	1980	¼	⅓	920±	Jenn-Air 183-BCR	With Auto Back-draft damper - Bird Screen &
2	1780	¼	¼	770±	Jenn-Air 183-BCR	Disconnect Switch ★ (Manually started)
3	450	¼	1/15	1550	Jenn-Air 80-CR	" do ★ " do
4	732	¼	⅙	1725	ILG - PE-123 (T)	Used as supply fan - See Sheet M-1 ★★
5	1440	¼	⅓	1725	Jenn-Air 100-CW ◗	Two speed with controller - See all Notes - Fan Nº1

★ - Power Roof Exhausters ★★ - Propeller Fan (T) - Thermostatically controlled
◗ - Centrifugal Wall Exhaust Fan. Fan Nº5 to be equipped same as Fan Nº1.

DRAWING NUMBER D23-M4-R1

REVISIONS					REVISIONS				
LOCATION	DESCRIPTION	DATE	BY	APP.	LOCATION	DESCRIPTION	DATE	BY	APP.
					GEN'L	1 Change to oil fired boiler	12-18-63		

APPROVALS: F. G. FRANKLIN — CHIEF ENGINEER; R. FRENCH — PROJECT ARCHITECT; H. B. SWYGERT, JR — ENGINEER; ARCHITECTURAL DESIGN; DRAWN BY KUNES; CHECKED BY; FINAL APPROVAL

LYLES, BISSETT, CARLISLE & WOLFF
lbc&w
ARCHITECTS - ENGINEERS COLUMBIA, S.C. - WASHINGTON, D.C.

This drawing and the design shown thereon are the property of Lyles, Bissett, Carlisle & Wolff, Architects-Engineers. The reproduction, copying, or use of this drawing without their written consent is prohibited and any infringement will be subject to legal action.

HHFA PROJECT NO. APW-SC-29G
DARLINGTON COUNTY COURTHOUSE
DARLINGTON, SOUTH CAROLINA
DATE 8 JULY 63
FILE NO. D-23

SHEET TITLE: AIR CONDITIONING - HEATING & VENTILATING DETAILS & SCHEDULES
DIVISION MECHANICAL

SHEET M-4 OF 8